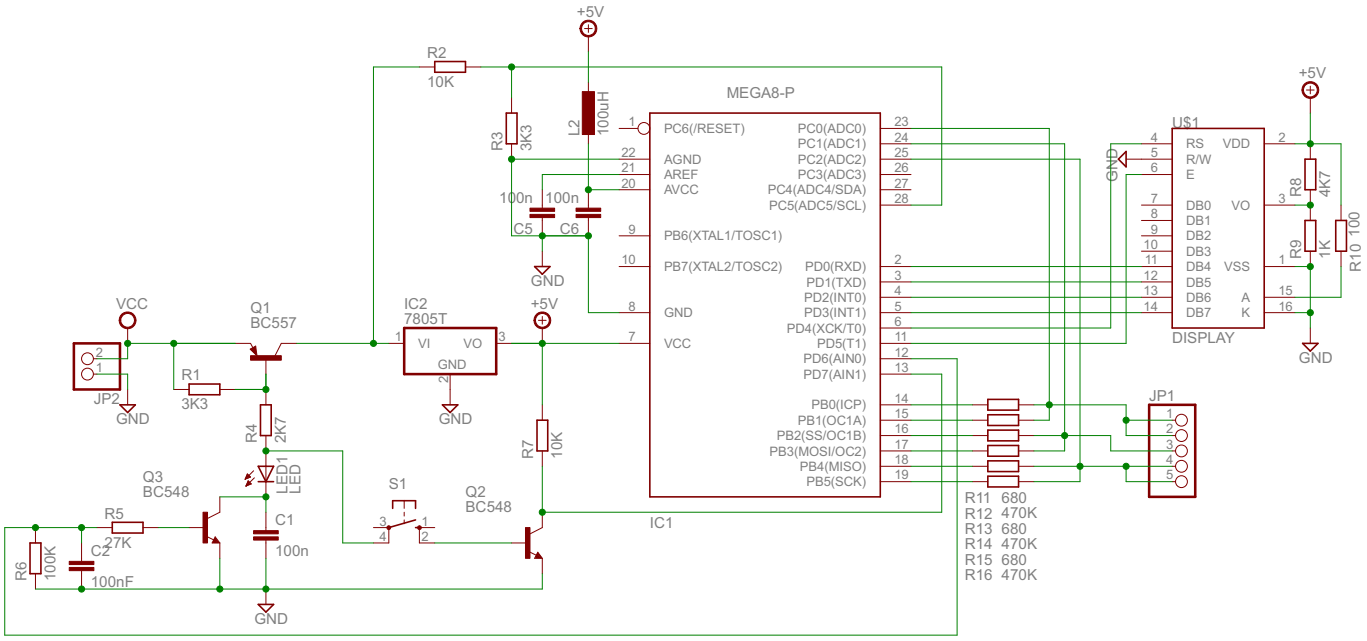
+5V
R2
10K
R3
3K3
L2
100uH
MEGA8-P
PC6(/RESET)
AGND
AREF
AVCC
PB6(XTAL1/TOSC1)
PB7(XTAL2/TOSC2)
GND
VCC
PC0(ADC0)
PC1(ADC1)
PC2(ADC2)
PC3(ADC3)
PC4(ADC4/SDA)
PC5(ADC5/SCL)
PD0(RXD)
PD1(TXD)
PD2(INT0)
PD3(INT1)
PD4(XCK/T0)
PD5(T1)
PD6(AIN0)
PD7(AIN1)
PB0(ICP)
PB1(OC1A)
PB2(SS/OC1B)
PB3(MOSI/OC2)
PB4(MISO)
PB5(SCK)
IC1
100n
C5
C6
GND
U$1
RS
R/W
E
DB0
DB1
DB2
DB3
DB4
DB5
DB6
DB7
VDD
VO
VSS
A
K
DISPLAY
R8
4K7
R9
1K
R10 100
VCC
JP2
Q1
BC557
R1
3K3
IC2
7805T
VI
VO
R4
2K7
LED1
LED
Q3
BC548
R5
27K
C2
100nF
R6
100K
C1
100n
S1
Q2
BC548
R7
10K
R11 680
R12 470K
R13 680
R14 470K
R15 680
R16 470K
JP1