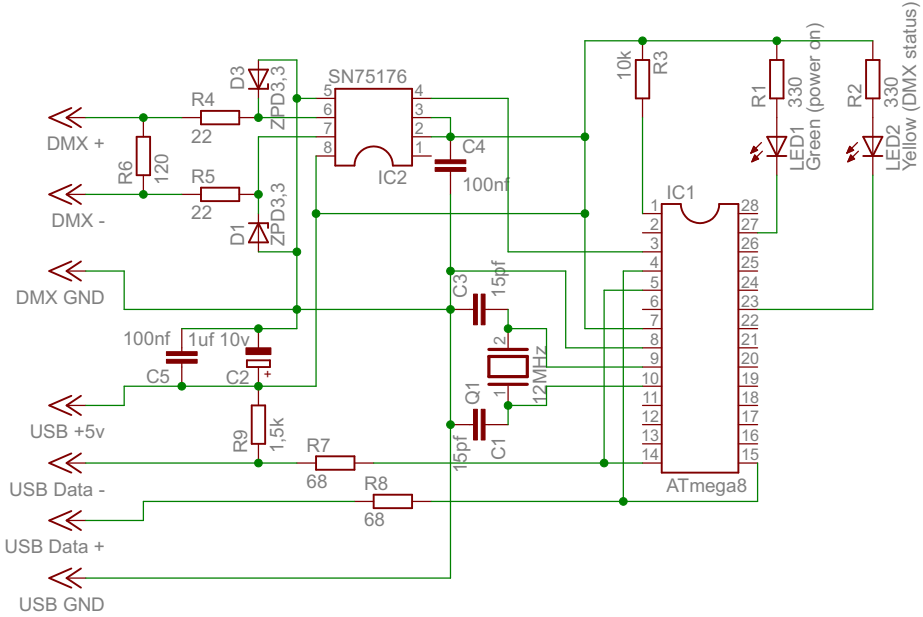

2013.02.23. 15:09:47 D:\A PROJEKTEK (folyamatban lévők)\1 USB-DMX\new schematic PDIP Socket.sch (Sheet: 1/1)