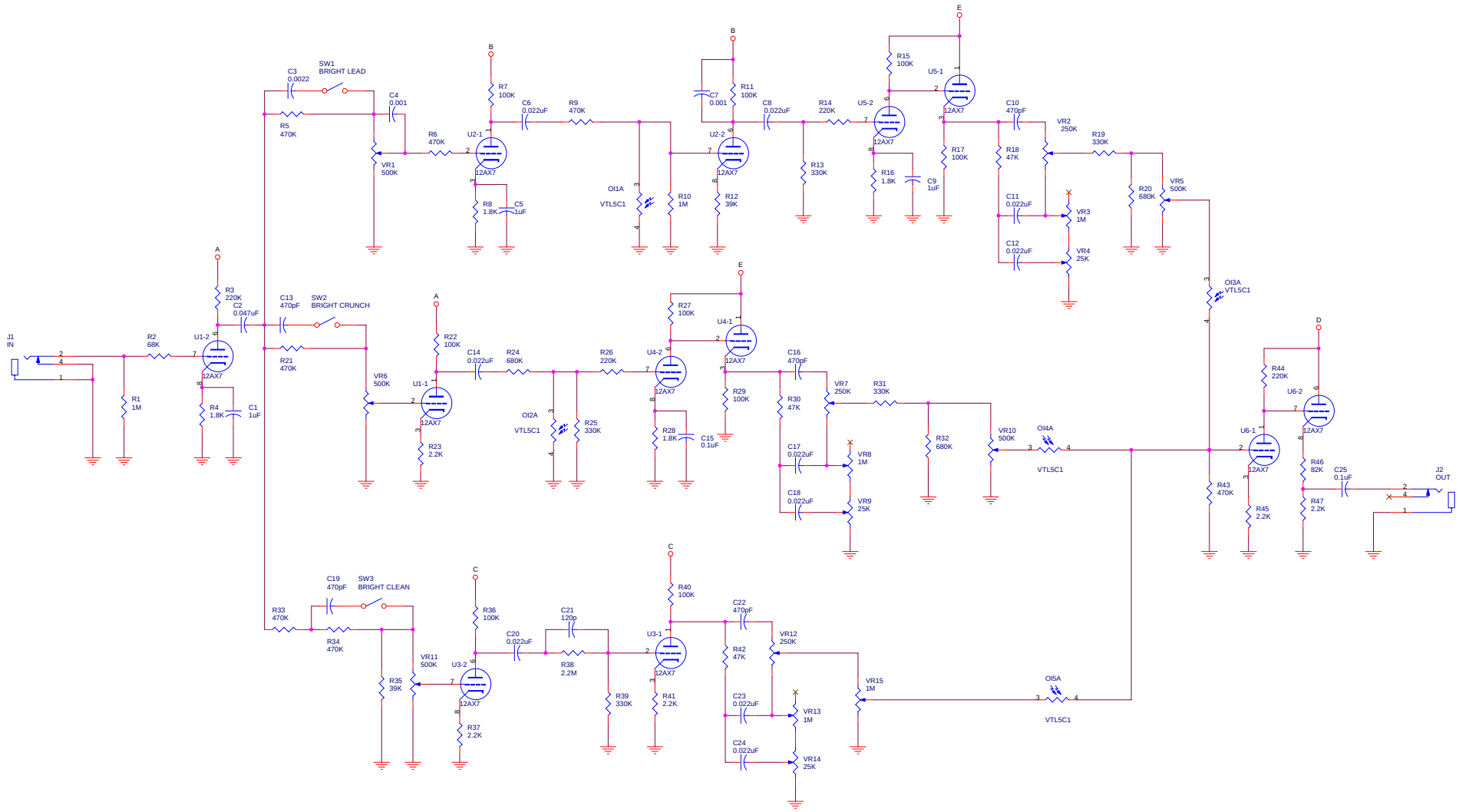

Title	SOLDANO X88R		
Size C	Document Number 1		Rev 1
Date: Friday, July 12, 2002		Sheet 1 of 1	